Decision Making in Logistics: A Chaos Theory Based Analysis

Priya Ranjan[2], Soundar Kumara [1], Amit Surana [1], Vikram Manikonda [2], , Mark Greaves[3], Wilbur Peng [2]

[1]The Pennsylvania State University, [2] IAI, [3] DARPA

[1]310 Leonhard Building, University Park, PA 16802

skumara@psu.edu

Abstract

Logistics in general is a complex system. In this paper we investigate the existence of chaos in logistics systems. Such an investigation is necessary to use appropriate and correct methods for further analysis, as linear systems techniques will not be useful. If a system exhibits chaos, decision making should consider the system characterization parameters from a chaos theory perspective. In this paper, three models from the existing literature are reported. Of these models, the non-preemptive queuing model is considered for further exploration. A prototypical supply chain example is used and the resulting behavior is characterized. At certain input values the behavior of the logistics system exhibits chaos. This information is useful for further analysis for predication and control. The working prototype is implemented in the DARPA Couggar agent architecture.

Introduction to the problem

In a logistics system one of the most fundamental questions is the analysis of the system behavior. We define the system as the entities (software and hardware) along with their interconnections (network) of a logistics system. A typical logistics system is characterized by a supply chain. Our hypothesis is that these systems are nonlinear, dynamic and in specific, chaotic. That is, the time evolution of the system behavior (measured by certain behavioral parameters of the system) is chaotic. The question now is how do we really characterize the time evolution and how can we use the insights obtained from such an analysis? This brief paper deals with these questions. We first give a brief explanation of the notion of nonlinear dynamics and continue further discussion.

Nonlinear Dynamics, Chaos and Fractals

In this section, we present a concise description of nonlinear dynamics, chaos and fractals. During the past decade, chaos theory has elicited a lot of interest among scientists and researchers. As a result, its ideas are beginning to be applied to many scientific and engineering disciplines, especially where nonlinear models are relevant [Isham, 1993].

Many physical systems that produce continuous-time response may be modeled by a set of differential equations of the form

$$\frac{d\bar{x}(t)}{dt} = F\left(\bar{x}(t)\right)$$

$F(\cdot)$ is generally a nonlinear *vector field.* The solution to this results in a trajectory

$$\bar{x}(t) = f\left(\bar{x}(0), t\right)$$

where $f : \mathrm{M} \rightarrow \mathrm{M}$ represents the flow that determines the evolution of **x**(t) for a particular initial condition **x**(0).

If the system is *dissipative,* as the system evolves from different initial conditions, the solutions usually shrink asymptotically to a compact subset of the whole state space **M**. This compact subset is called an attracting set. Every attracting disjoint subset of an attracting set is called an attractor [Isham, 1993].

In dissipative systems, the overall volume of the state space shrinks with time. However, there may be some directions along which the state space actually expands. That is, the system trajectories tend to move apart along certain directions and shrink along the others. However, as the attractors usually remain bounded, the flow exhibits a horseshoe-type pattern [Wiggins, 1990]. Because of this, trajctories starting from near-by points within an attractor may get separated exponentially as the system evolves. This condition is known as the *sensitive dependence on initial condition* (SDIC), and the attractor exhibiting SDIC is called a *strange attractor.*

A flow *f*, for a particular initial condition, is said to be chaotic if the trajectories in an attractor exhibit:

1. sensitive dependence on initial conditions, but are bounded,
2. irregular and aperiodic behavior, and
3. continuous broadband spectrum.

The irregular and aperiodic response of chaotic systems, usually betrays a special property of self-similarity or scale invariance. That is, the response appears similar over multiple scales of observation. Scale invariant mathematical entities are commonly known as *fractals.* Analytical techniques used to deduce the characteristics of nonlinear systems collectively constitute *fractal analysis.* The main objectives of fractal analysis can be broadly categorized depending on the end-purpose as follows:

1. identification of the presence of chaos from the system response;

2. establishing the invariants of the system dynamics-for system identification or indirect state estimation; and

3. chaos modeling-when the end-purpose is to capture and later reproduce the system dynamics.

A more detailed description of these concepts may be found in [Bukkapatnam et al., 2000]. In the rest of this paper we report three different models existing in literature [these are not our original models] that are useful in supply chain analysis. We consider the queuing model and apply it to the logistics scenario in the Cougaar architecture and discuss the results. We raise the fundamental question of how we can use these results for further analysis and control of a logistics system.

Supply chain and nonlinearity

The notion of evolution over time falls into the realm of what physicists call dynamics. Logistics systems are dynamic. Their behavior can be nonlinear. Therefore we can model a logistics system using the principles of nonlinear dynamics. A supply chain is an example of a logistics system. A typical supply chain exhibits stable behavior with damped oscillations in response to external disturbances. Unstable phenomena however can arise, due to feedback structure, inherent adjustment delays and nonlinear decision-making processes that go in a supply chain. One of the causes of unstable phenomena is that the information feedback in the system is slow relative to rate of changes that occur in the system. Nonlinearity is inherent in a supply chain. The first mode of unstable behavior to arise in nonlinear systems is usually the simple one-cycle self-sustained oscillations. If the instability drives the system further into the nonlinear regime, more complicated temporal behavior may be generated. The route to chaos through subsequent period-doubling bifurcations, as certain parameters of the system are varied, is generic to large class of systems in physics, chemistry, biology, economics and other fields. Functioning in chaotic regime deprives the ability for long-term predictions about the behavior of the system, while short-term predictions may be possible sometimes. As a result, control and stabilization of such a system becomes almost impossible. Here we investigate such dynamical behaviors that can arise in different models that represent some of components in a supply chain. *In the following sections we reproduce three models which are fundamental in understanding and explaining chaos in supply chain (Frameworks that can be used for modeling supply chains). For the sake of clarity we are reproducing these models here. Details can be found in the relevant references cited.*

Managerial System

A managerial system, allocates resources to its production and marketing departments in accordance with shifts in inventory and/or backlog [Rasmussen, and Moseklide, 1988] It has four level variables: *resources in production*, *resources in sales*, *inventory of finished products* and *number of customers*. In order to represent the time required to adjust production, a third order delay is introduced between production rate and inventory. The sum of the two resource variables is kept constant. The *rate of production* is determined from resources in production through a nonlinear function, which expresses a decreasing productivity of additional resources as production approaches maximum capacity. The *sales rate*, on the other hand, is determined by the number of customers and by the average sales per customer-year. Customers are mainly recruited through visits of the company salesman. The *rate of recruitment* depends upon the resources allocated to marketing and sales, and again it is assumed that there is a diminishing return to increasing sales activity: Once recruited, customers are assumed to remaining with the company for an average period *AT*, the *association time*.

A difference between production and sales causes the inventory to change. The Company is assumed to respond to such changes by adjusting its resource allocation. When the inventory is lower than desired, on the other hand, resources are redirected from sales to production. A certain minimum of resources is always maintained in both production and sales. In the model, this is secured by means of two limiting factors, which reduce the transfer rate when a resource lower-bound is approached. Finally the model assumes that there is a feedback from inventory to *customer defection rate*. If the inventory of finished products becomes very low, the delivery time is assumed to become unacceptable to many customers. As a consequence, the defection rate is enhanced by a factor $1+H$. We summarize the dynamical behavior of the system in the following.

Dynamical Behavior

The managerial system described by the authors [Rasmussen, and Moseklide, 1988] is controlled by two interacting negative feedbacks. Combined with the delays involved in adjusting production and sales, these loops create the potential for oscillatory behavior. If the transfer of resources is fast enough, this behavior is destabilized and the system starts to perform self-sustained oscillations. The amplitude of these oscillations is finally limited by the

various nonlinear restrictions in the model, particularly by the reduction of resource transfer rate as lower limits to resources in production or resources in sales are approached.

A series of abrupt changes in the system behavior is observed as competition between the basic growth tendency and nonlinear limiting factors is shifted. The simple one-cycle attractor corresponding to *H=10*, becomes unstable for *H=13* and a new stable attractor with twice the original period arises. If *H* is increased to 28 the stable attractor attains a period of 4**.** As *H* is further increased, the period-doubling bifurcations continue until *H=30* the threshold to chaos is exceeded. The system now starts to behave in an aperiodic and apparently random behavior. Hence the system shows chaotic behavior through a series of period doubling bifurcations.

Deterministic Queuing Model

Consider a simple discrete-time deterministic queuing model, with one server and two queuing lines (*X* and *Y*) representing some activity [Feichtinger, et al.,1994]. The input rates of both queues are constant and their sum equals the server-capacity. In each time period the server has to decide how much time to spend on each of the two activities. Let:

α **:** Constant input rate for activity X

β **:** Constant input rate for activity Y

Φ_X : Time spent on activity X

Φ_Y : Time spent on activity Y

x_k : Queue length of X

y_k : Queue length of Y

The amount of time Φ_X and Φ_Y that will be spent on activities *X* and *Y* in period *k+1* are determined by an adaptive feedback rule depending on the difference of the queue lengths x_k and y_k. The decision rule or policy function says that longer queues are served with higher priority. Two possibilities considered are:

•*All-or nothing decision*: the server decides to spend all its time on the activity corresponding to the longer queue. Hence Φ is a Heaviside function given by

$$\Phi(x-y) = 1 \text{ if } x \geq y$$
$$= 0 \text{ if } x < y$$

•*Mixed Solutions*: the server decides to spend most of its time to the activity corresponding to the longer queue. For this decision function a S-shaped logistic function is used as given by

$$\Phi(x-y) = \frac{1}{1+e^{k(x-y)}}$$

The parameter *k* tunes the "steepness" of the S-shape.
With these decision functions the new queue lengths x_{k+1} and y_{k+1} are given equations

$$x_{k+1} = x_k + \alpha - \Phi(x_k - y_k)$$
$$y_{k+1} = y_k + \beta - \Phi(x_k - y_k)$$

Using the constraints $\alpha + \beta = 1$ and $\Phi_X + \Phi_Y = 1$**,** it is sufficient to consider the dynamics of the map in order to study the behavior of the system

$$f(x) = x + \alpha - \Phi(2x-2)$$

We summarize the dynamical behavior discussed in [Feichtinger, et al.,1994] in the following.

Dynamical Behavior

For *0<k<4* and for all 0<α <1, the map f has a globally stable equilibrium. Simulation shows that when the parameter *k* is not too large the bifurcation diagrams with respect to α are simple. For larger values of *k* (e.g *k=7.3*) chaotic behavior arises after infinitely many period doubling bifurcations, as α is increased from 0.0 to 0.3. However, when α is further increased from 0.3 to 0.5, chaos disappears, after many period halving bifurcations. For 0.5<α <1 the bifurcations scenario is qualitatively the same as for 0<α <0.5 since the system is symmetric w.r.t α =0.5 and *x*=1. Physically, when α is close to 0, there is stable equilibrium, meaning that in the long run, in each time period the server spends a fixed proportion of time to each of the two activities, and it spends most of the time to the activity Y with the highest input rate. For α close to 1 we have same behavior, with the activities X and Y interchanged. For α close to 0.5, i.e. when the input rates of the two activities are almost equal, the equilibrium is unstable, and there is stable period 2 orbit. This means that in one period most of the time is spent on activity X, then in next period most of time is spent on activity Y, and again on activity X and so on. Chaotic behavior arises when α is somewhere between 0 and 0.5 or between 0.5 and 1, for α =1/3 and α =2/3 . Hence, a steep decision function together with a situation where the input rate of one activity is around twice the input rate of the other activity leads to irregular queue lengths.

As $k \to \infty$, the decision function Φ converges to the Heaviside function. The dynamical behavior of the queuing model in that case is equivalent to rigid rotation on a circle. For rational $\alpha = p/q$ of input rate, every point *x* is periodic with period *q*. In that case, of every *q* time periods *p* time periods are completely spent on the first activity,

while the remaining *q-p* time periods are spend on the other activity. On the other hand when α is irrational the dynamical behavior is quasi-periodic and every point *x* is aperiodic.

Preemptive Queuing Model with Delays

The Queuing system [Erramilli, and Forys, 1991]considered here has two queues (A and B) and a single server with following characteristics:

- Once served, the class A customer returns as a class B customer after a constant interval of time
- Class B has non-preemptive priority over class A, i.e., the class A queue does not get served until the class B queue is emptied.
- Schedules are organized every T units of time, i.e., if the low priority queue is emptied within time T, the server remains idle for the remaining time interval.
- Finally, the higher priority class B has a lower service rate than the low priority class A

Suppose the system is sampled at the end of every schedule cycle, and the following quantities are observed at the beginning of the *k*th interval:

A_k **:** Queue length of low priority queue

B_k **:** Queue length of high priority queue

C_k **:** Outflow from low priority queue in the *k*th interval

D_k **:** Outflow from high priority queue in the *k*th interval

λ_k **:** Arrival rate in the *k*th interval

The system is characterized by the following parameters:

μ_a : Service rate for the lower priority queue

μ_b : Service rate for the higher priority queue

l: The feedback interval in units of the schedule cycle

The following four equations then completely describe the evolution of the system:

$$A_{k+1} = A_k + \lambda_k - C_k \qquad (1)$$

$$C_k = \min(A_k + \lambda_k, \mu_a(1 - \frac{D_k}{\mu_b})) \qquad (2)$$

$$B_{k+1} = B_k + C_{k-l} - D_k \qquad (3)$$

$$D_k = \min(B_k + C_{k-l}, \mu_b) \qquad (4)$$

Equations (1) and (3) are merely conservation rules, while equations (2) and (4) model the constraints on the outflows and the interaction between the queues. This model while conceptually simple, exhibits surprisingly complex behaviors. The dynamical behavior reported in [Erramilli, and Forys, 1991] is summarized in the following.

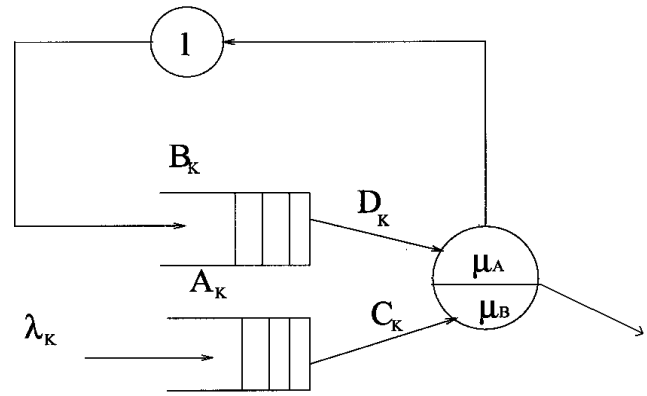

Figure 1: Non-preemptive Queuing Model

Dynamical Behavior

The analytic approach to solve for the flow model under constant arrivals (i.e. $\lambda_k = \lambda$ for all *k*) shows several classes of solutions. The system is found to batch its workload even for such perfectly smooth arrival patterns. Following are the characteristics of behavior of the system:

- Above a threshold arrival rate ($\lambda \geq \mu_b / 2$), a momentary overload can send the system into a number of stable modes of oscillations.
- Each mode of oscillations is characterized by distinct average queuing delays.
- Extreme sensitivity to parameters, and the existence of chaos, implies the system at a given time may be any one of a number of distinct steady-state modes.

The batching of the workload can cause significant queuing delays even at moderate occupancies. Also such oscillatory behavior significantly lowers the real-time capacity of the system.

Of the three models discussed the model reported by Erramalli and Forys (1991) is more realistic and can be generalized. In the next section we explain our rationale for selecting this model for adaptation to the logistics domain and discuss the results.

Application of queuing model to logistics scenario

The assumptions in the model proposed by Erramalli and Forys (1991) are generic in the sense that priorities are widely observed in large systems due to economic and administrative compulsions. Sometime they can also arise from the physical facts when two different stages of processing have certain temporal constraint. Priorities may also arise due to the non-homogeneity of the system where "knowledge" level of one agent is different from the other.

Varying service time again follows from physical constraints on the task. For example in a simple logistics scenario tasks like unpacking, shipping, logging and

dispatching may take different times. These times scales can vary widely depending on the nature and physical characteristics of the tasks.

The considerations regarding the generality of assumptions and the clear one-to-one correspondence between the physical logistics tasks and the model parameters described in [Erramilli, and Forys, 1991] made us apply the queuing model to a simple, yet, realistic logistics scenario.

Example Logistics Scenario

The example scenario consists of two stages modeled by the non-preemptive queuing formalism. We take a simple battle front scenario (this can be any context of supply of materials, not necessarily battle front). During the first stage, supplies are processed by the node (agent) This involves two tasks:
Task A: Unpacking
Task B: Shipping
Our assumptions are as follows:

1. Shipping takes more resources than packing,
2. Shipping gets a non preemptive priority
3. Resources are common to both the tasks

The second stage consists of disbursement of supplies. The output of first stage feeds into the second stage (as arrival). The two associated tasks are:
Task A: Maintaining an inventory
Task B: Disbursing the supply to the troops
The assumptions at stage two are as follows:

1. Disbursing takes more resources than maintaining inventory
2. Disbursing has a non pre-emptive priority
3. Resources are common to both the tasks

Figure 1 shows the queuing model. This is figure is reproduced from [Erramilli, and Forys, 1991]. It must be noted that that rules are very simple and generic. Priority and heterogeneity are fundamental to any logistic planning and scheduling. Tasks have to be prioritized in order to do the most important thing first. This comes naturally as we try to optimize a objective and assign the tasks their "importance." In addition in all logistics systems, resources are limited, both in time and space. Temporal constraints considered in the example are realistic, in the sense that you can not disburse supplies without unpacking them. Temporal dependence plays an important role in logistic planning (interdependency). This simple example also simulates the effect of arbitrary but bounded initial conditions

Cougaar (Cognitive Agent Architecture) is developed under DARPA Advanced Logistics Program (ALP). Survivability of Cougaar is addressed in the UltraLog program of DARPA. In the above example each stage is modeled as an agent. The activities are modeled as agent processes. We do not discuss Cougaar architecture in this paper. Details can be found at the URL: http://www.couggar.org.

Analysis

One of the hallmarks of chaos is sensitive dependency to initial conditions (SDIC). External environment (the world in which the logistics scenario resides) changes and hence changing the initial conditions. The following affect the initial conditions of the agents (thereby affecting the initial conditions of the queuing model):

1. Change in arrival rate of supplies (inputs to the agents),
2. Change in resources (assets) available in each agent, and
3. Delay in processing of Tasks

The internal states of the two agents are characterized by:

1. Supplies waiting to be unpacked
2. Supplies waiting to be Shipped
3. Supplies actually shipped
4. Supplies waiting to be inventoried
5. Supplies waiting to be disbursed to the troops.
6. Supplies actually Shipped

We have considered the above six variables and observed their behavior. Characterization of these behaviors leads to some interesting inferences.

We simulated the queuing models in each agent with the following model parameters. There are 162 personnel in each of the agents, who can be allocated to either task. We assume that it takes 1 unit of time and one person to do task A and one unit of time with 2 people to do task B. This defines the capacity/arrival rate as 54 items / unit time. Hence arrival rate can be 0-54 per unit time. We assume that the initial conditions are given by: x_{10}=131, x_{20}=201, x_{30}=151 and x_{40}=29

We have used Matlab for computations. We have experimented with several arrival rates and delays. We observe the state-space structure (time evolution) of the following:

1. Arrival rates at all the queues
2. Time series of various parameters
3. Power-spectrum

At arrival rates of 40 the system has a period of 1, at arrival rate of 50 a period 2, at 52 a period of 4 and at 53 the system shows a seemingly random behavior. This shows relatively irregular behavior with several different peaks in the power spectrum. The bifurcation diagram shows that at the arrival rate of 53 the system is chaotic. We show illustrative plots in figure 2. Time evolution (2a) clearly shows the existence of many periods showing the possible existence of chaotic behavior. In these graphs the following notations are used:

X_1: No of jobs waiting at queue A in agent 1 (waiting to be shipped)(Stage 1)

X_2: No. of Jobs waiting at queue B in agent 1 (waiting to be unpacked))(Stage 1)

X_3: No of jobs waiting at queue A in agent 2 (Waiting to finish maintain inventory)(Stage 2)

X_4: No of jobs waiting at queue B in agent 2 (waiting to be disbursed) (Stage 2)

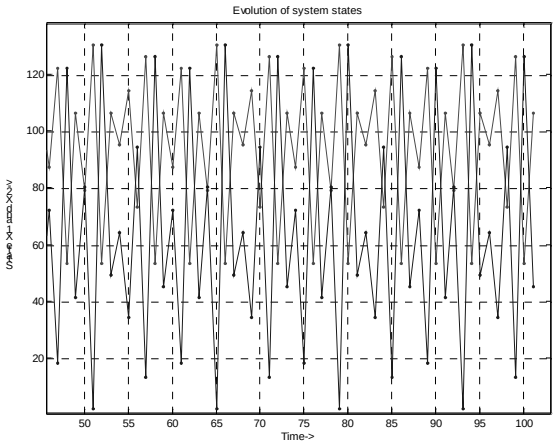

(a): Time evolution of system state

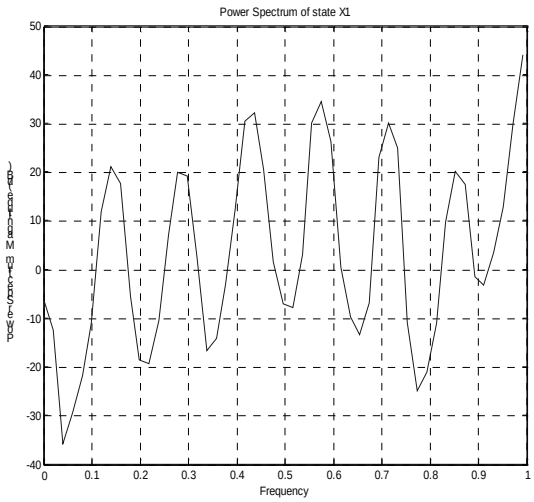

(b) Power spectrum

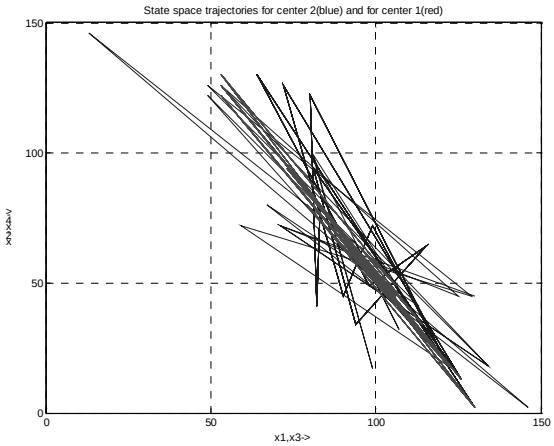

(c) State-space plot

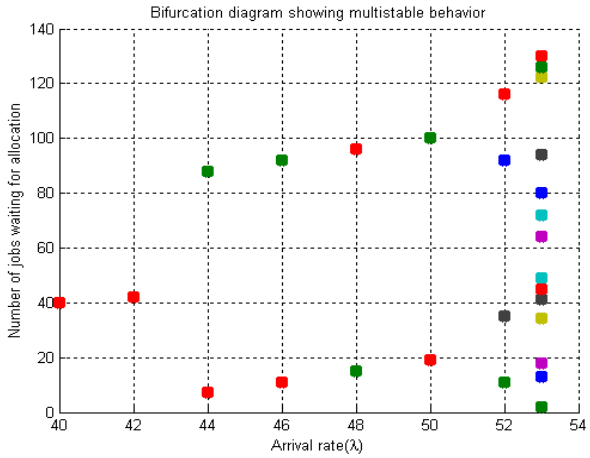

(d) Multi-stability : Bifurcation diagram for the system
Figure 2: Plots for arrival rate =53

Discussion

We could successfully show with certain initial conditions the existence of chaos in the simple yet realistic logistic system. The underlying queuing model at arrival rates of 53 leads to the chaotic behavior of the number of jobs waiting to be processed. The bifurcation diagram points to the fact that X_j's (for j=1,2,3,4) exhibit aperioidic behavior. The physical implication is that the resources needed vary from time to time and the logistics system will exhibit nervousness, which is an undesirable property. We have also observed a cascading effect (when one agent enters the chaotic behavior, the connected agent also tends to exhibit chaos). This leads to the problem of planning of later stages facing much more uncertainty compared to the first stage even for simple fixed deterministic arrivals. We have also observed increased average delay. There is an increase in delay by 25% if the system starts batching the load From our analysis we can conclude that if the two agents start load batching then inventory requirement may go to 200% as evident from the plots.

It is necessary to make sure in this case to keep the arrival rates to less than 53, there by enforcing control policies which will keep the system stable or quasi-stable. If the system ends up being chaotic then we could perform further analysis to study the characteristics and use them to control the behavior in the short term. We also compute : Average mutual information (ami), Global dimension (g_dim), Local dimension (l_dim), Correlation dimension (c_dim) and Largest Lyapunov Exponent (l_exp).These computed values also indicate the existence of Chaos in this logistics system.

Chaotic behavior in deterministic dynamical systems is an intrinsically non-linear phenomenon. We could successfully show that a simple example logistics system is chaotic. A characteristic feature of a chaotic systems is an extreme sensitivity to changes in initial conditions while

the dynamics, at least for the so-called dissipative systems, is still constrained to a finite region of the state space called an attractor. In such instances, Fourier analysis and ARMA models may not be useful to study the time traces of supply chain systems. The need to extract interesting physical information about the dynamics of observed systems when they are operating in a chaotic regime has led to development of *nonlinear time series analysis* techniques. Systematically, the study of potentially, chaotic systems may be divided into three areas: *identification of chaotic behavior, modeling and prediction* and *control*. The first area shows how chaotic systems may be separated form stochastic ones and, at the same time, provides estimates of the degrees of freedom and the complexity of the underlying chaotic system. Based on such results, identification of a state space representation allowing for subsequent predictions may be carried out. The last stage, if desirable, involves control of a chaotic system. In this short paper we have concentrated on the first area i.e. *identification of chaotic behavior*. In general if we consider this step in spatio-temporal regime, the following tasks are needed to be accomplished[Abarbanel, 1996]:

- *Signal Separation (Finding the signal)*: Separation of broadband signal form broadband "noise" using deterministic nature of signal.
- *Phase Space reconstruction (Finding the space)*: Time lagged variables are used to form coordinates for a phase space in d_E dimension:

  $$y(n) = [x(n), x(n+T), ...x(n+(d_E - 1)T)]$$

  d_E is determined using false nearest neighbors test and time lag T using mutual information.
- *Classification of the signal*: Determination of invariants of system such as Lyapunov exponents, various fractal dimensions.
- *Making models and Prediction*: Determination of the parameters a_j of the assumed model

  $$y(n) \rightarrow y(n+1)$$
  $$y(n+1) = F(y(n), a_1, a_2, ...a_p)$$

  which are consistent with invariant classifiers (Lyapunov exponents, dimensions).

In this paper we have discussed three models which can represent the components of a supply chain. The non-preemptive queuing model is used for detailed application to a part of a supply chain, two agents interacting in a military logistics scenario. The queuing model forms the processing component of the logistics agents implemented in the Cougaar architecture. One of the manifestations of complexity is through the onset of chaos. Our analysis shows the cascading effect of chaos. This points to the conjecture that the supply chain may exhibit chaotic behavior. The underlying motivation of our study is to build control models. Our next step in this research is to build adaptive predictive and control models for larger networks from the insights we have derived from the current analysis.

Acknowledgement

Soundar Kumara wishes to acknowledge DARPA for its support (Grant#: MDA 972-01-1-0563) under the UltraLog program for this research.

Author Affiliations

Soundar Kumara,(Corresponding author) Amit Surana: Department of Industrial and Manufactuinrg Engineering, 310 Leonhard Building, The Pennsylvania State University, University Park, PA 16802

Priya Ranjan, Vikram Manikonda, Wilbur Peng: Intelligent Automation Inc., 7519 Standish Place, Suite 200, Rockville, MD 20855.

Mark Greaves, DARPA TTO/JLTO, 3701 N. Fairfax Drive, Arlington, VA 22203

References

Abarbanel, H.D.I. *Analysis of Observed Chaotic Data*. Springer-Verlag New York Inc. 1996.

Bukkapatnam, S.T.S., Kumara, S., and Lakhtakia, A. 2000. Fractal estimation of flank wear in turning *ASME Journal of Dynamic Systems, Measurements and Control*.. 122:89-94.

Erramilli, A. and Forys, L. J. Feb 1991. Oscillations and Chaos in a Flow Model of a Switching System. *IEEE Journal on Selected Areas in Communications* Vol.9, No 2:171-178.

Feichtinger, G., Hommes, C. H. and Herold W. 1994. Chaos in a simple Deterministic Queuing System. *ZOR-Mathematical Methods of Operations Research* 40:109-119.

Isham, V 1993. Statistical Aspects of chaos: A review. In *Networks and Chaos - Statistical and Probabilistic Aspects*, Barndorff-Nielsen et al. (editors).

Rasmussen, R. D. and Moseklide, E. 1988. Bifurcations and chaos in generic management model. *European Journal of Operations Research Science* 35:80-88.

Wiggins, S. 1990. *Introduction to Applied* Nonlin*ear Dynamical Systems and Chaos.* Springer-Verlag New York, Inc.